BASEL, REFLECTOR TUBE MEDIUM BEAM PC CLEAR

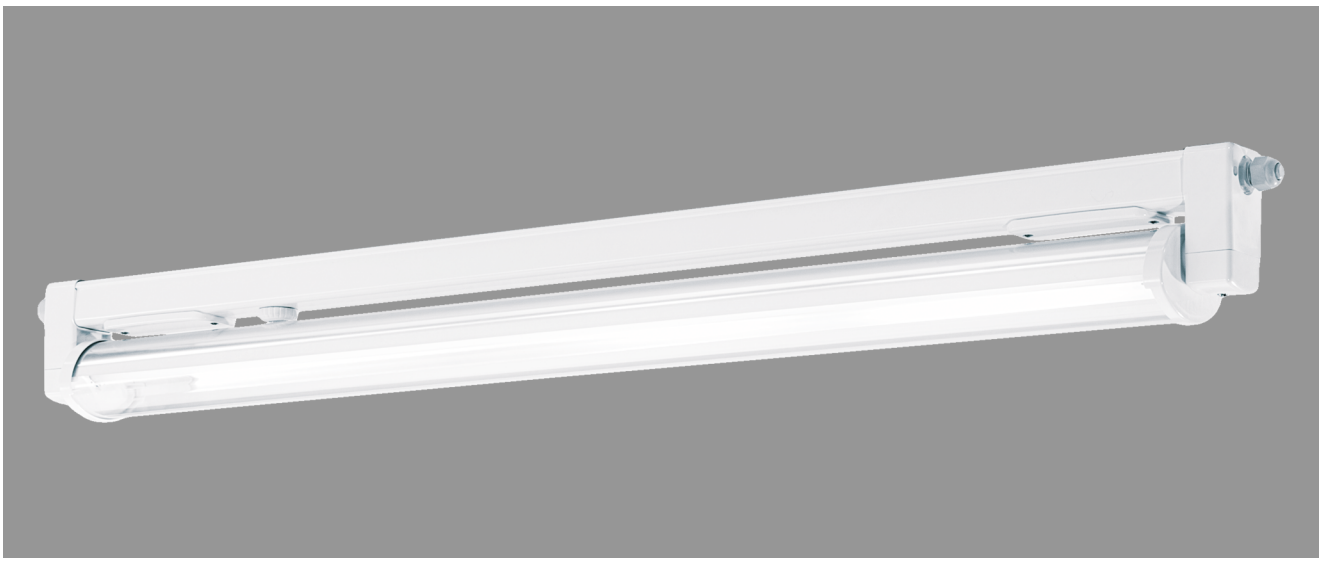

BASEL with medium beam reflector PC clear (fracture-proof), inductive; T8/36W

Luminaire made of glass fibre reinforced polyester; impact resistant
For zone 2 and zone 22, gas-proof, IP 67, protection class II.
With clear PC reflector tube with mirrorfinish, internal reflector medium beam.
Reflector tube can be locked in steps of 5°.
Built-in low loss ballast with thermal fuse and DEOS starter.
Ready for connection with 2 cable glands M20,
through-wiring 2 x 1,5 mm², 2 access covers.
2 special polymere mounting clamps for variable mounting distance.

Article number: 520 410

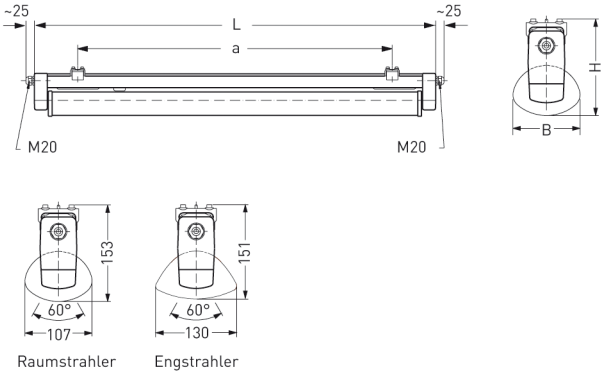

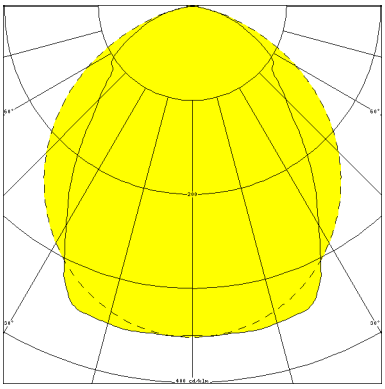

MASSE

Länge (mm)	Breite (mm)	Höhe (mm)	a-Mass (mm)
1251	107	153	980

LIGHT OUTPUT RATIO

LOR (%)
81.68